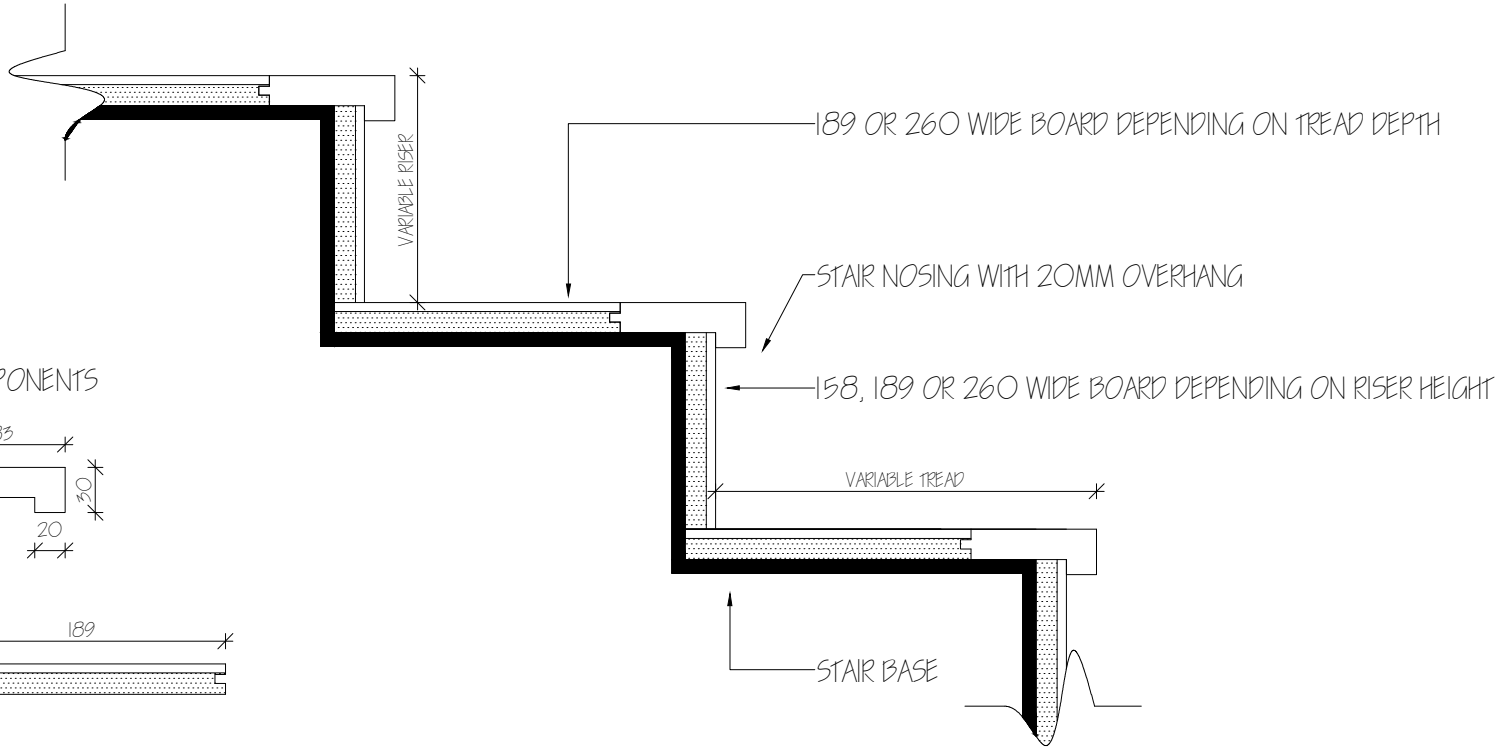

COMPONENTS

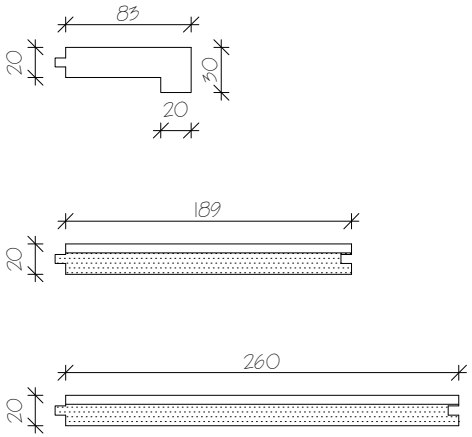

ROYAL OAK FLOORS
by Harper & Sandilands

ROYAL OAK FLOORS
STAIR DETAIL - TRADITIONAL OVERHANG